US 20140252988A1

(19) United States

(12) Patent Application Publication

(10) Pub. No.: US 2014/0252988 A1

(43) Pub. Date: Sep. 11, 2014

Azizi et al.

(54) PIXEL CIRCUITS FOR AMOLED DISPLAYS

(71) Applicant: **IGNIS INNOVATION INC.**, Waterloo (CA)

(72) Inventors: **Yaser Azizi**, Waterloo (CA); **Gholamreza Chaji**, Waterloo (CA)

(73) Assignee: **Ignis Innovation Inc.**, Waterloo (CA)

(21) Appl. No.: **13/789,978**

(22) Filed: **Mar. 8, 2013**

Publication Classification

(51) **Int. Cl.**
H05B 33/08 (2006.01)

(52) **U.S. Cl.**
CPC *H05B 33/0848* (2013.01)
USPC **315/307**

(57) **ABSTRACT**

The OLED voltage of a selected pixel is extracted from the pixel produced when the pixel is programmed so that the pixel current is a function of the OLED voltage. One method for extracting the OLED voltage is to first program the pixel in a way that the current is not a function of OLED voltage, and then in a way that the current is a function of OLED voltage. During the latter stage, the programming voltage is changed so that the pixel current is the same as the pixel current when the pixel was programmed in a way that the current was not a function of OLED voltage. The difference in the two programming voltages is then used to extract the OLED voltage.

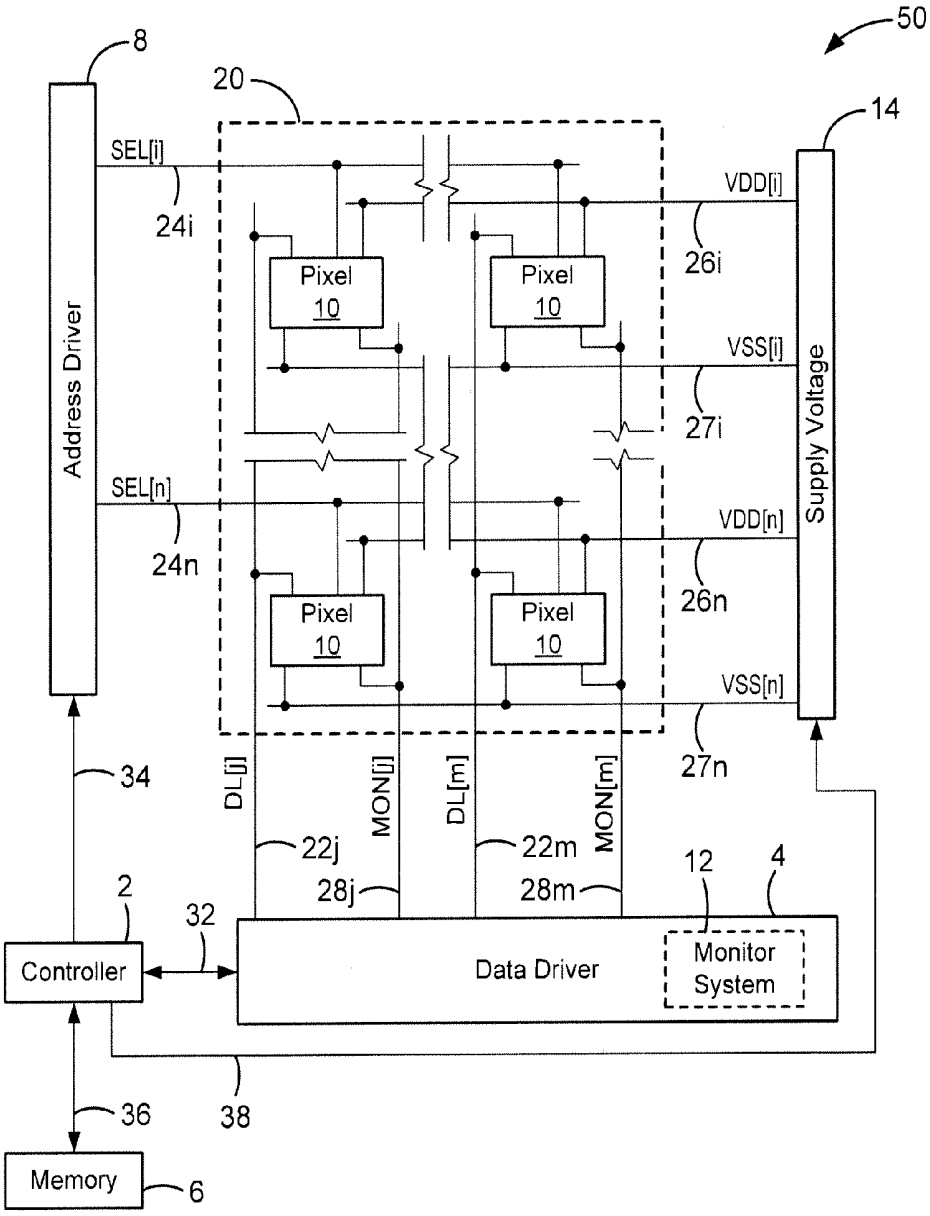

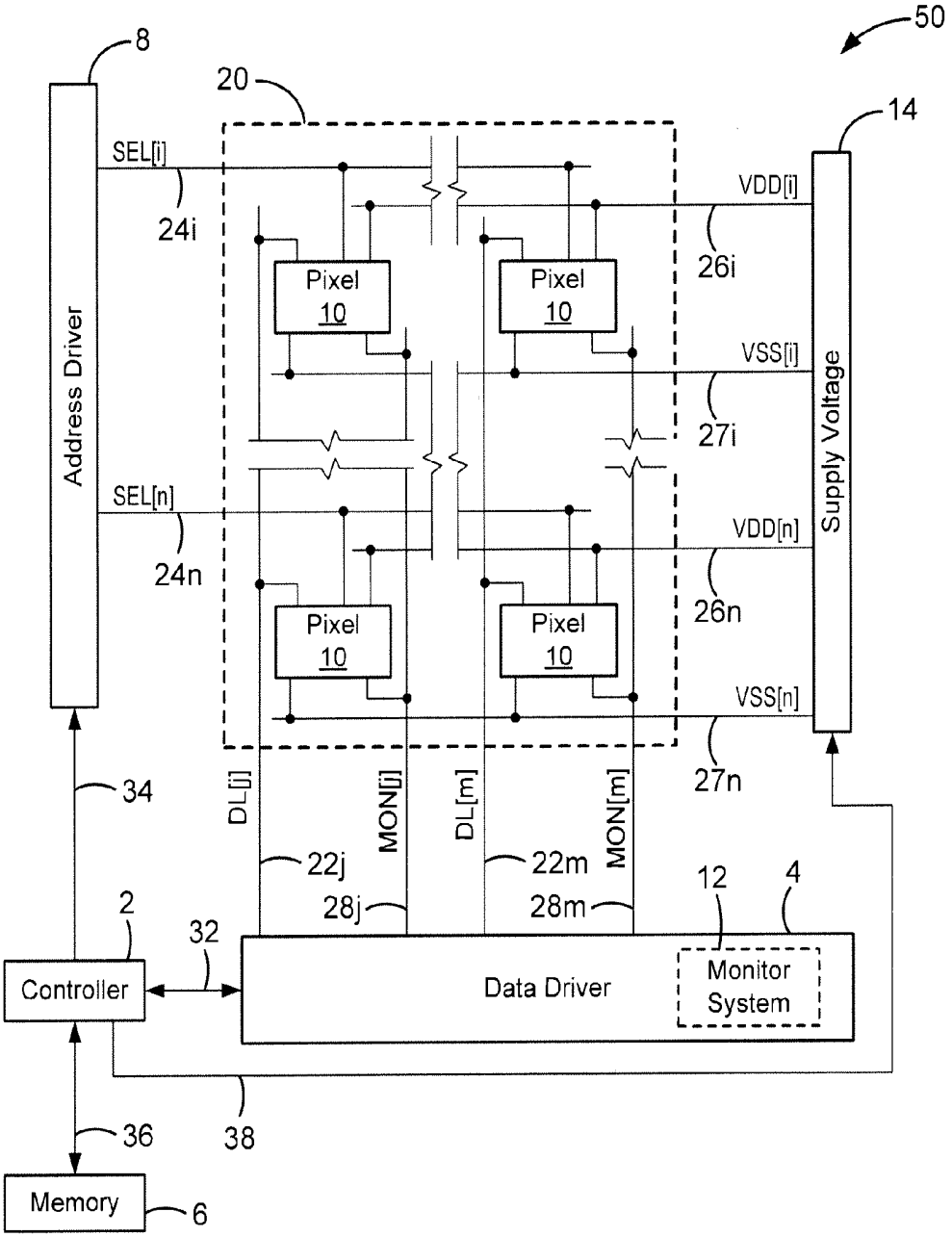
50
8
20
14
SEL[i]
24i
VDD[i]
26i
Pixel
10
Pixel
10
VSS[i]
27i
Address Driver
Supply Voltage
SEL[n]
24n
VDD[n]
26n
Pixel
10
Pixel
10
VSS[n]
27n
34
DL[j]
MON[j]
DL[m]
MON[m]
22j
22m
28j
28m
12
4
2
32
Controller
Data Driver
Monitor System
36
38
Memory
6

FIG. 1

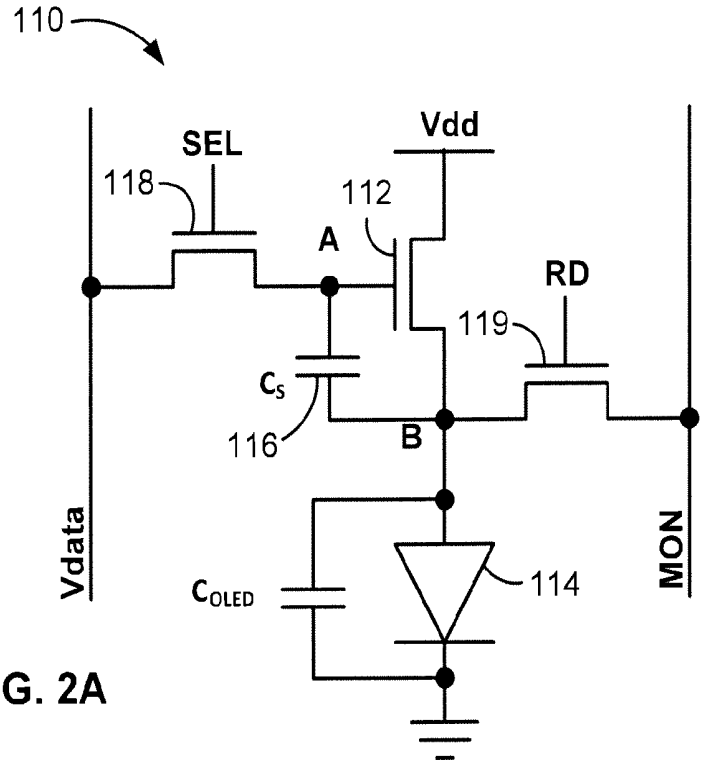
110
SEL
Vdd
118
112
A
RD
119
C_S
116
B
Vdata
MON
C_{OLED}
114

FIG. 2A

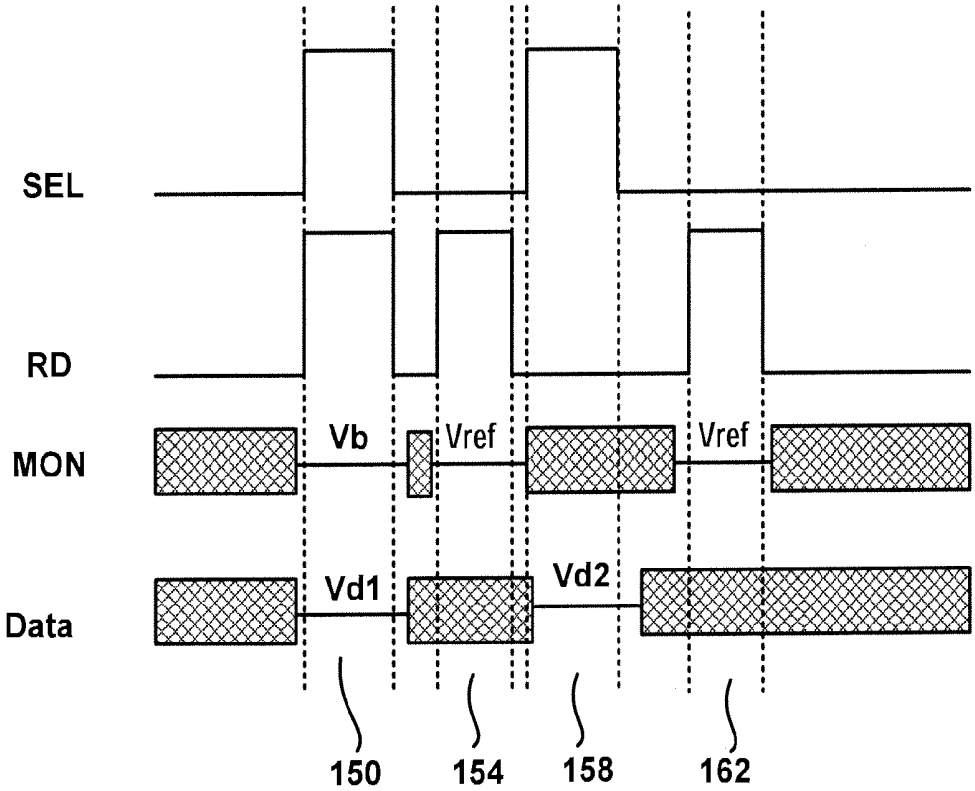
SEL
RD
MON
Vb
Vref
Vref
Data
Vd1
Vd2
150
154
158
162

FIG. 2B

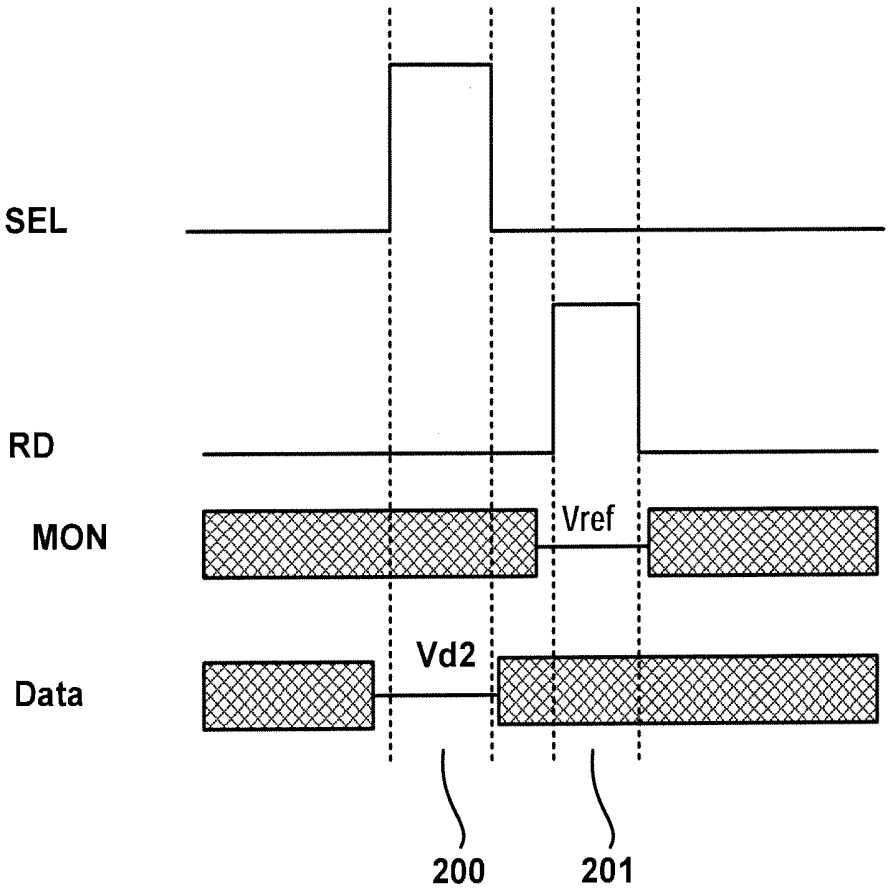

FIG. 2C

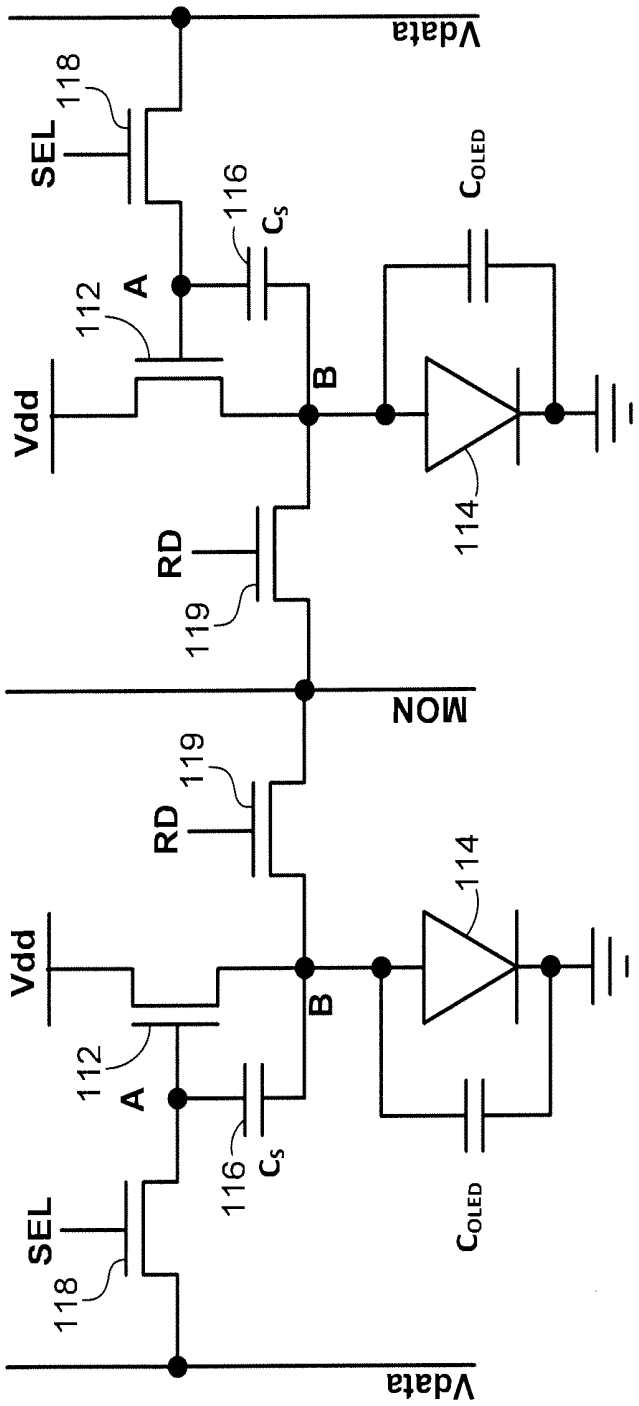
Vdata
SEL
118
112
A
116
C_S
Vdd
B
RD
119
MON
C_{OLED}
114
Vdata
SEL
118
112
A
116
C_S
Vdd
B
RD
119
114
C_{OLED}

FIG. 3

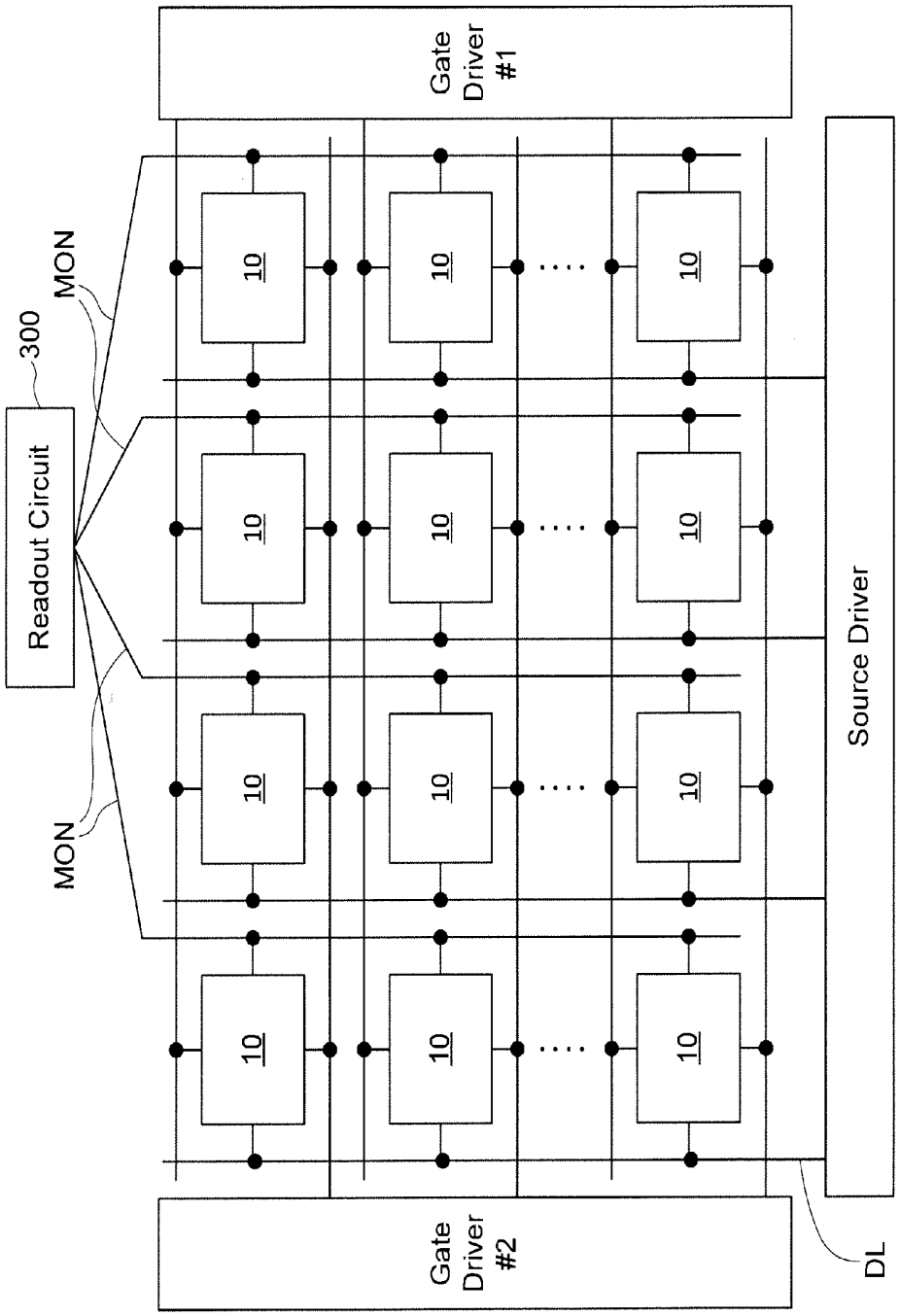
Gate Driver #1
MON
300
Readout Circuit
MON
10
Source Driver
Gate Driver #2
DL

FIG. 4

PIXEL CIRCUITS FOR AMOLED DISPLAYS

FIELD OF THE INVENTION

[0001] The present disclosure generally relates to circuits for use in displays, and methods of driving, calibrating, and programming displays, particularly displays such as active matrix organic light emitting diode displays.

BACKGROUND

[0002] Displays can be created from an array of light emitting devices each controlled by individual circuits (i.e., pixel circuits) having transistors for selectively controlling the circuits to be programmed with display information and to emit light according to the display information. Thin film transistors ("TFTs") fabricated on a substrate can be incorporated into such displays. TFTs tend to demonstrate non-uniform behavior across display panels and over time as the displays age. Compensation techniques can be applied to such displays to achieve image uniformity across the displays and to account for degradation in the displays as the displays age.

[0003] Some schemes for providing compensation to displays to account for variations across the display panel and over time utilize monitoring systems to measure time dependent parameters associated with the aging (i.e., degradation) of the pixel circuits. The measured information can then be used to inform subsequent programming of the pixel circuits so as to ensure that any measured degradation is accounted for by adjustments made to the programming. Such monitored pixel circuits may require the use of additional transistors and/or lines to selectively couple the pixel circuits to the monitoring systems and provide for reading out information. The incorporation of additional transistors and/or lines may undesirably decrease pixel-pitch (i.e., "pixel density").

SUMMARY

[0004] In accordance with one embodiment, the OLED voltage of a selected pixel is extracted from the pixel produced when the pixel is programmed so that the pixel current is a function of the OLED voltage. One method for extracting the OLED voltage is to first program the pixel in a way that the current is not a function of OLED voltage, and then in a way that the current is a function of OLED voltage. During the latter stage, the programming voltage is changed so that the pixel current is the same as the pixel current when the pixel was programmed in a way that the current was not a function of OLED voltage. The difference in the two programming voltages is then used to extract the OLED voltage.

[0005] Another method for extracting the OLED voltage is to measure the difference between the current of the pixel when it is programmed with a fixed voltage in both methods (being affected by OLED voltage and not being affected by OLED voltage). This measured difference and the current-voltage characteristics of the pixel are then used to extract the OLED voltage.

[0006] A further method for extracting the shift in the OLED voltage is to program the pixel for a given current at time zero (before usage) in a way that the pixel current is a function of OLED voltage, and save the programming voltage. To extract the OLED voltage shift after some usage time, the pixel is programmed for the given current as was done at time zero. To get the same current as time zero, the programming voltage needs to change. The difference in the two programming voltages is then used to extract the shift in the OLED voltage. Here one needs to remove the effect of TFT aging from the second programming voltage first; this is done by programming the pixel without OLED effect for a given current at time zero and after usage. The difference in the programming voltages in this case is the TFT aging, which is subtracted from the calculated different in the aforementioned case.

[0007] In one implementation, the current effective voltage V_{OLED} of a light-emitting device in a selected pixel is determined by supplying a programming voltage to the drive transistor in the selected pixel to supply a first current to the light-emitting device (the first current being independent of the effective voltage V_{OLED} of the light-emitting device), measuring the first current, supplying a second programming voltage to the drive transistor in the selected pixel to supply a second current to the light-emitting device, the second current being a function of the current effective voltage V_{OLED} of the light-emitting device, measuring the second current and comparing the first and second current measurements, adjusting the second programming voltage to make the second current substantially the same as the first current, and extracting the value of the current effective voltage V_{OLED} of the light-emitting device from the difference between the first and second programming voltages.

[0008] In another implementation, the current effective voltage V_{OLED} of a light-emitting device in a selected pixel is determined by supplying a first programming voltage to the drive transistor in the selected pixel to supply a first current to the light-emitting device in the selected pixel (the first current being independent of the effective voltage V_{OLED} of the light-emitting device), measuring the first current, supplying a second programming voltage to the drive transistor in the selected pixel to supply a second current to the light-emitting device in the selected pixel (the second current being a function of the current effective voltage V_{OLED} of the light-emitting device), measuring the second current, and extracting the value of the current effective voltage V_{OLED} of the light-emitting device from the difference between the first and second current measurements.

[0009] In a modified implementation, the current effective voltage V_{OLED} of a light-emitting device in a selected pixel is determined by supplying a first programming voltage to the drive transistor in the selected pixel to supply a predetermined current to the light-emitting device at a first time (the first current being a function of the effective voltage V_{OLED} of the light-emitting device), supplying a second programming voltage to the drive transistor in the selected pixel to supply the predetermined current to the light-emitting device at a second time following substantial usage of the display, and extracting the value of the current effective voltage V_{OLED} of the light-emitting device from the difference between the first and second programming voltages.

[0010] In another modified implementation, the current effective voltage V_{OLED} of a light-emitting device in a selected pixel is determined by supplying a predetermined programming voltage to the drive transistor in the selected pixel to supply a first current to the light-emitting device (the first current being independent of the effective voltage V_{OLED} of the light-emitting device), measuring the first current, supplying the predetermined programming voltage to the drive transistor in the selected pixel to supply a second current to the light-emitting device (the second current being a function of the current effective voltage V_{OLED} of the light-emitting device), measuring the second current, and extracting the

value of the current effective voltage V_{OLED} of the light-emitting device from the difference between the first and second currents and current-voltage characteristics of the selected pixel.

[0011] In a preferred implementation, a system is provided for controlling an array of pixels in a display in which each pixel includes a light-emitting device. Each pixel includes a pixel circuit that comprises the light-emitting device, which emits light when supplied with a voltage V_{OLED}; a drive transistor for driving current through the light-emitting device according to a driving voltage across the drive transistor during an emission cycle, the drive transistor having a gate, a source and a drain and characterized by a threshold voltage; and a storage capacitor coupled across the source and gate of the drive transistor for providing the driving voltage to the drive transistor. A supply voltage source is coupled to the drive transistor for supplying current to the light-emitting device via the drive transistor, the current being controlled by the driving voltage. A monitor line is coupled to a read transistor that controls the coupling of the monitor line to a first node that is common to the source side of the storage capacitor, the source of the drive transistor, and the light-emitting device. A data line is coupled to a switching transistor that controls the coupling of the data line to a second node that is common to the gate side of the storage capacitor and the gate of the drive transistor. A controller coupled to the data and monitor lines and to the switching and read transistors is adapted to:

[0012] (1) during a first cycle, turn on the switching and read transistors while delivering a voltage Vb to the monitor line and a voltage Vd**1** to the data line, to supply the first node with a voltage that is independent of the voltage across the light-emitting device,

[0013] (2) during a second cycle, turn on the read transistor and turn off the switching transistor while delivering a voltage Vref to the monitor line, and read a first sample of the drive current at the first node via the read transistor and the monitor line,

[0014] (3) during a third cycle, turn off the read transistor and turn on the switching transistor while delivering a voltage Vd**2** to the data line, so that the voltage at the second node is a function of V_{OLED}, and

[0015] (4) during a fourth cycle, turn on said read transistor and turn off said switching transistor while delivering a voltage Vref to said monitor line, and read a second sample the drive current at said first node via said read transistor and said monitor line. The first and second samples of the drive current are compared and, if they are different, the first through fourth cycles are repeated using an adjusted value of at least one of the voltages Vd**1** and Vd**2**, until the first and second samples are substantially the same.

[0016] The foregoing and additional aspects and embodiments of the present invention will be apparent to those of ordinary skill in the art in view of the detailed description of various embodiments and/or aspects, which is made with reference to the drawings, a brief description of which is provided next.

BRIEF DESCRIPTION OF THE DRAWINGS

[0017] The foregoing and other advantages of the invention will become apparent upon reading the following detailed description and upon reference to the drawings.

[0018] FIG. **1** is a block diagram of an exemplary configuration of a system for driving an OLED display while monitoring the degradation of the individual pixels and providing compensation therefor.

[0019] FIG. **2**A is a circuit diagram of an exemplary pixel circuit configuration.

[0020] FIG. **2**B is a timing diagram of first exemplary operation cycles for the pixel shown in FIG. **2**A.

[0021] FIG. **2**C is a timing diagram of second exemplary operation cycles for the pixel shown in FIG. **2**A.

[0022] FIG. **3** is a circuit diagram of another exemplary pixel circuit configuration.

[0023] FIG. **4** is a block diagram of a modified configuration of a system for driving an OLED display using a shared readout circuit, while monitoring the degradation of the individual pixels and providing compensation therefor.

[0024] While the invention is susceptible to various modifications and alternative forms, specific embodiments have been shown by way of example in the drawings and will be described in detail herein. It should be understood, however, that the invention is not intended to be limited to the particular forms disclosed. Rather, the invention is to cover all modifications, equivalents, and alternatives falling within the spirit and scope of the invention as defined by the appended claims.

DETAILED DESCRIPTION

[0025] FIG. **1** is a diagram of an exemplary display system **50**. The display system **50** includes an address driver **8**, a data driver **4**, a controller **2**, a memory storage **6**, and display panel **20**. The display panel **20** includes an array of pixels **10** arranged in rows and columns. Each of the pixels **10** is individually programmable to emit light with individually programmable luminance values. The controller **2** receives digital data indicative of information to be displayed on the display panel **20**. The controller **2** sends signals **32** to the data driver **4** and scheduling signals **34** to the address driver **8** to drive the pixels **10** in the display panel **20** to display the information indicated. The plurality of pixels **10** associated with the display panel **20** thus comprise a display array ("display screen") adapted to dynamically display information according to the input digital data received by the controller **2**. The display screen can display, for example, video information from a stream of video data received by the controller **2**. The supply voltage **14** can provide a constant power voltage or can be an adjustable voltage supply that is controlled by signals from the controller **2**. The display system **50** can also incorporate features from a current source or sink (not shown) to provide biasing currents to the pixels **10** in the display panel **20** to thereby decrease programming time for the pixels **10**.

[0026] For illustrative purposes, the display system **50** in FIG. **1** is illustrated with only four pixels **10** in the display panel **20**. It is understood that the display system **50** can be implemented with a display screen that includes an array of similar pixels, such as the pixels **10**, and that the display screen is not limited to a particular number of rows and columns of pixels. For example, the display system **50** can be implemented with a display screen with a number of rows and columns of pixels commonly available in displays for mobile devices, monitor-based devices, and/or projection-devices.

[0027] The pixel **10** is operated by a driving circuit ("pixel circuit") that generally includes a driving transistor and a light emitting device. Hereinafter the pixel **10** may refer to the pixel circuit. The light emitting device can optionally be an

organic light emitting diode, but implementations of the present disclosure apply to pixel circuits having other electroluminescence devices, including current-driven light emitting devices. The driving transistor in the pixel **10** can optionally be an n-type or p-type amorphous silicon thin-film transistor, but implementations of the present disclosure are not limited to pixel circuits having a particular polarity of transistor or only to pixel circuits having thin-film transistors. The pixel circuit **10** can also include a storage capacitor for storing programming information and allowing the pixel circuit **10** to drive the light emitting device after being addressed. Thus, the display panel **20** can be an active matrix display array.

[0028] As illustrated in FIG. **1**, the pixel **10** illustrated as the top-left pixel in the display panel **20** is coupled to a select line **24***i*, a supply line **26***i*, a data line **22***j*, and a monitor line **28***j*. A read line may also be included for controlling connections to the monitor line. In one implementation, the supply voltage **14** can also provide a second supply line to the pixel **10**. For example, each pixel can be coupled to a first supply line **26** charged with Vdd and a second supply line **27** coupled with Vss, and the pixel circuits **10** can be situated between the first and second supply lines to facilitate driving current between the two supply lines during an emission phase of the pixel circuit. The top-left pixel **10** in the display panel **20** can correspond a pixel in the display panel in a "ith" row and "jth" column of the display panel **20**. Similarly, the top-right pixel **10** in the display panel **20** represents a "jth" row and "mth" column; the bottom-left pixel **10** represents an "nth" row and "jth" column; and the bottom-right pixel **10** represents an "nth" row and "mth" column. Each of the pixels **10** is coupled to appropriate select lines (e.g., the select lines **24***i* and **24***n*), supply lines (e.g., the supply lines **26***i* and **26***n*), data lines (e.g., the data lines **22***j* and **22***m*), and monitor lines (e.g., the monitor lines **28***j* and **28***m*). It is noted that aspects of the present disclosure apply to pixels having additional connections, such as connections to additional select lines, and to pixels having fewer connections, such as pixels lacking a connection to a monitoring line.

[0029] With reference to the top-left pixel **10** shown in the display panel **20**, the select line **24***i* is provided by the address driver **8**, and can be utilized to enable, for example, a programming operation of the pixel **10** by activating a switch or transistor to allow the data line **22***j* to program the pixel **10**. The data line **22***j* conveys programming information from the data driver **4** to the pixel **10**. For example, the data line **22***j* can be utilized to apply a programming voltage or a programming current to the pixel **10** in order to program the pixel **10** to emit a desired amount of luminance. The programming voltage (or programming current) supplied by the data driver **4** via the data line **22***j* is a voltage (or current) appropriate to cause the pixel **10** to emit light with a desired amount of luminance according to the digital data received by the controller **2**. The programming voltage (or programming current) can be applied to the pixel **10** during a programming operation of the pixel **10** so as to charge a storage device within the pixel **10**, such as a storage capacitor, thereby enabling the pixel **10** to emit light with the desired amount of luminance during an emission operation following the programming operation. For example, the storage device in the pixel **10** can be charged during a programming operation to apply a voltage to one or more of a gate or a source terminal of the driving transistor during the emission operation, thereby causing the driving transistor to convey the driving current through the light emitting device according to the voltage stored on the storage device.

[0030] Generally, in the pixel **10**, the driving current that is conveyed through the light emitting device by the driving transistor during the emission operation of the pixel **10** is a current that is supplied by the first supply line **26***i* and is drained to a second supply line **27***i*. The first supply line **26***i* and the second supply line **27***i* are coupled to the voltage supply **14**. The first supply line **26***i* can provide a positive supply voltage (e.g., the voltage commonly referred to in circuit design as "Vdd") and the second supply line **27***i* can provide a negative supply voltage (e.g., the voltage commonly referred to in circuit design as "Vss"). Implementations of the present disclosure can be realized where one or the other of the supply lines (e.g., the supply line **27***i*) is fixed at a ground voltage or at another reference voltage.

[0031] The display system **50** also includes a monitoring system **12**. With reference again to the top left pixel **10** in the display panel **20**, the monitor line **28***j* connects the pixel **10** to the monitoring system **12**. The monitoring system **12** can be integrated with the data driver **4**, or can be a separate standalone system. In particular, the monitoring system **12** can optionally be implemented by monitoring the current and/or voltage of the data line **22***j* during a monitoring operation of the pixel **10**, and the monitor line **28***j* can be entirely omitted. Additionally, the display system **50** can be implemented without the monitoring system **12** or the monitor line **28***j*. The monitor line **28***j* allows the monitoring system **12** to measure a current or voltage associated with the pixel **10** and thereby extract information indicative of a degradation of the pixel **10**. For example, the monitoring system **12** can extract, via the monitor line **28***j*, a current flowing through the driving transistor within the pixel **10** and thereby determine, based on the measured current and based on the voltages applied to the driving transistor during the measurement, a threshold voltage of the driving transistor or a shift thereof.

[0032] The monitoring system **12** can also extract an operating voltage of the light emitting device (e.g., a voltage drop across the light emitting device while the light emitting device is operating to emit light). The monitoring system **12** can then communicate signals **32** to the controller **2** and/or the memory **6** to allow the display system **50** to store the extracted degradation information in the memory **6**. During subsequent programming and/or emission operations of the pixel **10**, the degradation information is retrieved from the memory **6** by the controller **2** via memory signals **36**, and the controller **2** then compensates for the extracted degradation information in subsequent programming and/or emission operations of the pixel **10**. For example, once the degradation information is extracted, the programming information conveyed to the pixel **10** via the data line **22***j* can be appropriately adjusted during a subsequent programming operation of the pixel **10** such that the pixel **10** emits light with a desired amount of luminance that is independent of the degradation of the pixel **10**. In an example, an increase in the threshold voltage of the driving transistor within the pixel **10** can be compensated for by appropriately increasing the programming voltage applied to the pixel **10**.

[0033] FIG. **2**A is a circuit diagram of an exemplary driving circuit for a pixel **110**. The driving circuit shown in FIG. **2**A is utilized to calibrate, program and drive the pixel **110** and includes a drive transistor **112** for conveying a driving current through an organic light emitting diode ("OLED") **114**. The

OLED **114** emits light according to the current passing through the OLED **114**, and can be replaced by any current-driven light emitting device. The OLED **114** has an inherent capacitance C_{OLED}. The pixel **110** can be utilized in the display panel **20** of the display system **50** described in connection with FIG. **1**.

[0034] The driving circuit for the pixel **110** also includes a storage capacitor **116** and a switching transistor **118**. The pixel **110** is coupled to a select line SEL, a voltage supply line Vdd, a data line Vdata, and a monitor line MON. The driving transistor **112** draws a current from the voltage supply line Vdd according to a gate-source voltage (Vgs) across the gate and source terminals of the drive transistor **112**. For example, in a saturation mode of the drive transistor **112**, the current passing through the drive transistor **112** can be given by $Ids=\beta(Vgs-Vt)^2$, where β is a parameter that depends on device characteristics of the drive transistor **112**, Ids is the current from the drain terminal to the source terminal of the drive transistor **112**, and Vt is the threshold voltage of the drive transistor **112**.

[0035] In the pixel **110**, the storage capacitor **116** is coupled across the gate and source terminals of the drive transistor **112**. The storage capacitor **116** has a first terminal, which is referred to for convenience as a gate-side terminal, and a second terminal, which is referred to for convenience as a source-side terminal. The gate-side terminal of the storage capacitor **116** is electrically coupled to the gate terminal of the drive transistor **112**. The source-side terminal **116***s* of the storage capacitor **116** is electrically coupled to the source terminal of the drive transistor **112**. Thus, the gate-source voltage Vgs of the drive transistor **112** is also the voltage charged on the storage capacitor **116**. As will be explained further below, the storage capacitor **116** can thereby maintain a driving voltage across the drive transistor **112** during an emission phase of the pixel **110**.

[0036] The drain terminal of the drive transistor **112** is connected to the voltage supply line Vdd, and the source terminal of the drive transistor **112** is connected to (1) the anode terminal of the OLED **114** and (2) a monitor line MON via a read transistor **119**. A cathode terminal of the OLED **114** can be connected to ground or can optionally be connected to a second voltage supply line, such as the supply line Vss shown in FIG. **1**. Thus, the OLED **114** is connected in series with the current path of the drive transistor **112**. The OLED **114** emits light according to the magnitude of the current passing through the OLED **114**, once a voltage drop across the anode and cathode terminals of the OLED achieves an operating voltage (V_{OLED}) of the OLED **114**. That is, when the difference between the voltage on the anode terminal and the voltage on the cathode terminal is greater than the operating voltage V_{OLED}, the OLED **114** turns on and emits light. When the anode-to-cathode voltage is less than V_{OLED}, current does not pass through the OLED **114**.

[0037] The switching transistor **118** is operated according to the select line SEL (e.g., when the voltage on the select line SEL is at a high level, the switching transistor **118** is turned on, and when the voltage SEL is at a low level, the switching transistor is turned off). When turned on, the switching transistor **118** electrically couples node A (the gate terminal of the driving transistor **112** and the gate-side terminal of the storage capacitor **116**) to the data line Vdata.

[0038] The read transistor **119** is operated according to the read line RD (e.g., when the voltage on the read line RD is at a high level, the read transistor **119** is turned on, and when the voltage RD is at a low level, the read transistor **119** is turned off). When turned on, the read transistor **119** electrically couples node B (the source terminal of the driving transistor **112**, the source-side terminal of the storage capacitor **116**, and the anode of the OLED **114**) to the monitor line MON.

[0039] FIG. **2**B is a timing diagram of exemplary operation cycles for the pixel **110** shown in FIG. **2**A. During a first cycle **150**, both the SEL line and the RD line are high, so the corresponding transistors **118** and **119** are turned on. The switching transistor **118** applies a voltage Vd**1**, which is at a level sufficient to turn on the drive transistor **112**, from the data line Vdata to node A. The read transistor **119** applies a monitor-line voltage Vb, which is at a level that turns the OLED **114** off, from the monitor line MON to node B. As a result, the gate-source voltage Vgs is independent of V_{OLED} (Vd**1**−Vb−Vds**3**, where Vds**3** is the voltage drop across the read transistor **119**). The SEL and RD lines go low at the end of the cycle **150**, turning off the transistors **118** and **119**.

[0040] During the second cycle **154**, the SEL line is low to turn off the switching transistor **118**, and the drive transistor **112** is turned on by the charge on the capacitor **116** at node A. The voltage on the read line RD goes high to turn on the read transistor **119** and thereby permit a first sample of the drive transistor current to be taken via the monitor line MON, while the OLED **114** is off. The voltage on the monitor line MON is Vref, which may be at the same level as the voltage Vb in the previous cycle.

[0041] During the third cycle **158**, the voltage on the select line SEL is high to turn on the switching transistor **118**, and the voltage on the read line RD is low to turn off the read transistor **119**. Thus, the gate of the drive transistor **112** is charged to the voltage Vd**2** of the data line Vdata, and the source of the drive transistor **112** is set to V_{OLED} by the OLED **114**. Consequently, the gate-source voltage Vgs of the drive transistor **112** is a function of V_{OLED} ($Vgs=Vd2-V_{OLED}$).

[0042] During the fourth cycle **162**, the voltage on the select line SEL is low to turn off the switching transistor, and the drive transistor **112** is turned on by the charge on the capacitor **116** at node A. The voltage on the read line RD is high to turn on the read transistor **119**, and a second sample of the current of the drive transistor **112** is taken via the monitor line MON.

[0043] If the first and second samples of the drive current are not the same, the voltage Vd**2** on the Vdata line is adjusted, the programming voltage Vd**2** is changed, and the sampling and adjustment operations are repeated until the second sample of the drive current is the same as the first sample. When the two samples of the drive current are the same, the two gate-source voltages should also be the same, which means that:

$$\begin{aligned} V_{OLED} &= Vd2 - Vgs \\ &= Vd2 - (Vd1 - Vb - Vds3) \\ &= Vd2 - Vd1 + Vb + Vds3. \end{aligned}$$

[0044] After some operation time (t), the change in V_{OLED} between time **0** and time t is $\Delta V_{OLED}=V_{OLED}(t)-V_{OLED}(0)=Vd2(t)-Vd2(0)$. Thus, the difference between the two programming voltages Vd**2**(*t*) and Vd**2**(**0**) can be used to extract the OLED voltage.

[0045] FIG. **2**C is a modified schematic timing diagram of another set of exemplary operation cycles for the pixel **110**

shown in FIG. **2**A, for taking only a single reading of the drive current and comparing that value with a known reference value. For example, the reference value can be the desired value of the drive current derived by the controller to compensate for degradation of the drive transistor **112** as it ages. The OLED voltage V_{OLED} can be extracted by measuring the difference between the pixel currents when the pixel is programmed with fixed voltages in both methods (being affected by V_{OLED} and not being affected by V_{OLED}). This difference and the current-voltage characteristics of the pixel can then be used to extract V_{OLED}.

[0046] During the first cycle **200** of the exemplary timing diagram in FIG. **2**C, the select line SEL is high to turn on the switching transistor **118**, and the read line RD is low to turn off the read transistor **118**. The data line Vdata supplies a voltage Vd**2** to node A via the switching transistor **118**. During the second cycle **201**, SEL is low to turn off the switching transistor **118**, and RD is high to turn on the read transistor **119**. The monitor line MON supplies a voltage Vref to the node B via the read transistor **118**, while a reading of the value of the drive current is taken via the read transistor **119** and the monitor line MON. This read value is compared with the known reference value of the drive current and, if the read value and the reference value of the drive current are different, the cycles **200** and **201** are repeated using an adjusted value of the voltage Vd**2**. This process is repeated until the read value and the reference value of the drive current are substantially the same, and then the adjusted value of Vd**2** can be used to determine V_{OLED}.

[0047] FIG. **3** is a circuit diagram of two of the pixels **110***a* and **110***b* like those shown in FIG. **2**A but modified to share a common monitor line MON, while still permitting independent measurement of the driving current and OLED voltage separately for each pixel. The two pixels **110***a* and **110***b* are in the same row but in different columns, and the two columns share the same monitor line MON. Only the pixel selected for measurement is programmed with valid voltages, while the other pixel is programmed to turn off the drive transistor **12** during the measurement cycle. Thus, the drive transistor of one pixel will have no effect on the current measurement in the other pixel.

[0048] FIG. **4** illustrates a modified drive system that utilizes a readout circuit **300** that is shared by multiple columns of pixels while still permitting the measurement of the driving current and OLED voltage independently for each of the individual pixels **10**. Although only four columns are illustrated in FIG. **4**, it will be understood that a typical display contains a much larger number of columns, and they can all use the same readout circuit. Alternatively, multiple readout circuits can be utilized, with each readout circuit still sharing multiple columns, so that the number of readout circuits is significantly less than the number of columns. Only the pixel selected for measurement at any given time is programmed with valid voltages, while all the other pixels sharing the same gate signals are programmed with voltages that cause the respective drive transistors to be off. Consequently, the drive transistors of the other pixels will have no effect on the current measurement being taken of the selected pixel. Also, when the driving current in the selected pixel is used to measure the OLED voltage, the measurement of the OLED voltage is also independent of the drive transistors of the other pixels.

[0049] While particular embodiments and applications of the present invention have been illustrated and described, it is to be understood that the invention is not limited to the precise construction and compositions disclosed herein and that various modifications, changes, and variations can be apparent from the foregoing descriptions without departing from the spirit and scope of the invention as defined in the appended claims.

What is claimed is:

1. A method of determining the current effective voltage V_{OLED} of a light-emitting device in a selected pixel in an array of pixels in a display in which each pixel includes a drive transistor for supplying current to said light-emitting device, said method comprising

supplying current to said light-emitting device via said drive transistor in said selected pixel, said current being a function of the current effective voltage V_{OLED} of said light-emitting device,

measuring said current, and

extracting the value of the current effective voltage V_{OLED} of said light-emitting device from said current measurement.

2. The method of claim **1** in which said light-emitting devices are OLEDs.

3. The method of claim **1** in which said current is supplied to said light-emitting device via a drive transistor in each pixel in each pixel.

4. The method of claim **1** in which said current is measured via a read transistor in each pixel.

5. A method of determining the current effective voltage V_{OLED} of a light-emitting device in a selected pixel in an array of pixels in a display in which each pixel includes a drive transistor for supplying current to said light-emitting device, said method comprising

supplying a programming voltage to said drive transistor in said selected pixel to supply a first current to said light-emitting device in said selected pixel, said first current being independent of the effective voltage V_{OLED} of said light-emitting device,

measuring said first current,

supplying a second programming voltage to said drive transistor in said selected pixel to supply a second current to said light-emitting device in said selected pixel, said second current being a function of the current effective voltage V_{OLED} of said light-emitting device,

measuring said second current and comparing said first and second current measurements,

adjusting said second programming voltage to make said second current substantially the same as said first current,

extracting the value of the current effective voltage V_{OLED} of said light-emitting device from the difference between said first and second programming voltages.

6. The method of claim **5** in which said light-emitting devices are OLEDs.

7. A method of determining the current effective voltage V_{OLED} of a light-emitting device in a selected pixel in an array of pixels in a display in which each pixel includes a drive transistor for supplying current to said light-emitting device, said method comprising

supplying a first programming voltage to said drive transistor in said selected pixel to supply a first current to said light-emitting device in said selected pixel, said first current being independent of the effective voltage V_{OLED} of said light-emitting device,

measuring said first current,

supplying a second programming voltage to said drive transistor in said selected pixel to supply a second current to said light-emitting device in said selected pixel, said second current being a function of the current effective voltage V_{OLED} of said light-emitting device,

measuring said second current, and

extracting the value of the current effective voltage V_{OLED} of said light-emitting device from the difference between said first and second current measurements.

8. The method of claim **7** in which said light-emitting devices are OLEDs.

9. A method of determining the current effective voltage V_{OLED} of a light-emitting device in a selected pixel in an array of pixels in a display in which each pixel includes a drive transistor for supplying current to said light-emitting device, said method comprising

supplying a first programming voltage to said drive transistor in said selected pixel to supply a predetermined current to said light-emitting device in said selected pixel at a first time, said first current being a function of the effective voltage V_{OLED} of said light-emitting device,

supplying a second programming voltage to said drive transistor in said selected pixel to supply said predetermined current to said light-emitting device in said selected pixel at a second time following substantial usage of said display, and

extracting the value of the current effective voltage V_{OLED} of said light-emitting device from the difference between said first and second programming voltages.

10. The method of claim **9** in which said light-emitting devices are OLEDs.

11. A method of determining the current effective voltage V_{OLED} of a light-emitting device in a selected pixel in an array of pixels in a display in which each pixel includes a drive transistor for supplying current to said light-emitting device, said method comprising

supplying a predetermined programming voltage to said drive transistor in said selected pixel to supply a first current to said light-emitting device in said selected pixel, said first current being independent of the effective voltage V_{OLED} of said light-emitting device,

measuring said first current,

supplying said predetermined programming voltage to said drive transistor in said selected pixel to supply a second current to said light-emitting device in said selected pixel, said second current being a function of the current effective voltage V_{OLED} of said light-emitting device,

measuring said second current, and

extracting the value of the current effective voltage V_{OLED} of said light-emitting device from the difference between said first and second currents and current-voltage characteristics of said selected pixel.

12. A system for determining the current effective voltage V_{OLED} of a pixel in an array of pixels in a display in which each pixel includes a light-emitting device that emits light when supplied with a voltage V_{OLED}, the system comprising a controller adapted to

determine the current effective voltage V_{OLED} of a light-emitting device in a selected pixel in an array of pixels in a display in which each pixel includes a drive transistor for supplying current to said light-emitting device, said method comprising

supply current to said light-emitting device via said drive transistor in said selected pixel, said current being a function of the current effective voltage V_{OLED} of said light-emitting device,

measure said current, and

extract the value of the current effective voltage V_{OLED} of said light-emitting device from said current measurement.

13. A system for determining the current effective voltage V_{OLED} of a pixel in an array of pixels in a display in which each pixel includes a light-emitting device that emits light when supplied with a voltage V_{OLED}, the system comprising

a pixel circuit in each of said pixels, said circuit including

a drive transistor for driving current through the light-emitting device according to a driving voltage across the drive transistor during an emission cycle,

a storage capacitor coupled across the source and gate of said drive transistor for providing said driving voltage to said drive transistor,

a monitor line coupled to a read transistor that controls the coupling of said monitor line to a node that is common to the source of said drive transistor and said light-emitting device,

a data line coupled to a switching transistor that controls the coupling of said data line to the gate of said drive transistor, and

a controller coupled to said data and monitor lines and to said switching and read transistors, and adapted to

turn on said switching and read transistors of a selected pixel while supplying said first node of said selected pixel with a voltage that is sufficient to turn on said light-emitting device of said selected pixel, the current supplied to said light-emitting device being a function of the voltage V_{OLED} of said device,

measure the current flowing through said drive transistor and said light-emitting device of the selected pixel, and

extract from said current measurement the effective voltage V_{OLED}.

14. The system of claim **13** in which said first node of said selected pixel is supplied with a first voltage that is not sufficient to turn on said light-emitting device of said selected pixel so that the current supplied to said light-emitting device is not a function of the voltage V_{OLED} of said device, prior to supplying said first node of said selected pixel with a second voltage that is sufficient to turn on said light-emitting device of the selected pixel so that the current supplied to said light-emitting device is a function of the voltage V_{OLED} of said device.

15. The system of claim **14** in which said voltage V_{OLED} is determined from the difference between said first and second voltages.

16. A system for controlling an array of pixels in a display in which each pixel includes a light-emitting device, the system comprising

a pixel circuit in each of said pixels, said circuit including said light-emitting device, which emits light when supplied with a voltage V_{OLED},

a drive transistor for driving current through the light-emitting device according to a driving voltage across the drive transistor during an emission cycle, said drive transistor having a gate, a source and a drain and characterized by a threshold voltage,

a storage capacitor coupled across the source and gate of said drive transistor for providing said driving voltage to said drive transistor,

a supply voltage source coupled to said drive transistor for supplying current to said light-emitting device via said drive transistor, said current being controlled by said driving voltage,

a monitor line coupled to a read transistor that controls the coupling of said monitor line to a first node that is common to the source side of said storage capacitor, the source of said drive transistor, and said light-emitting device,

a data line coupled to a switching transistor that controls the coupling of said data line to a second node that is common to the gate side of said storage capacitor and the gate of said drive transistor, and

a controller coupled to said data and monitor lines and to said switching and read transistors, and adapted to

during a first cycle, turn on said switching and read transistors while delivering a voltage Vb to said monitor line and a voltage Vd**1** to said data line, to supply said first node with a voltage that is independent of the voltage across said light-emitting device,

during a second cycle, turn on said read transistor and turn off said switching transistor while delivering a voltage Vref to said monitor line, and read a first sample of the drive current at said first node via said read transistor and said monitor line,

during a third cycle, turn off said read transistor and turn on said switching transistor while delivering a voltage Vd**2** to said data line, so that the voltage at said second node is a function of V_{OLED},

during a fourth cycle, turn on said read transistor and turn off said switching transistor while delivering a voltage Vref to said monitor line, and read a second sample of the drive current at said first node via said read transistor and said monitor line, and

compare said first and second samples and, if said first and second samples are different, repeating said first through fourth cycles using an adjusted value of at least one of said voltages Vd**1** and Vd**2**, until said first and second samples are substantially the same.

17. The system of claim **16** in which said pixels are arranged in rows and columns, and said pixel circuits in a plurality of columns share a common monitor line.

18. The system of claim **17** in which said pixel circuits that share a common monitor line are in adjacent columns.

19. The system of claim **17** in which, during said second and fourth cycles, said controller is adapted to turn off all the drive transistor in all of said pixel circuits sharing a common monitor line, except the pixel circuit in which said drive current is being read.

20. The system of claim **16** in which said controller is adapted to determine the current value of V_{OLED} when it has been determined that said first and second samples are substantially the same.

21. A system for controlling an array of pixels in a display in which each pixel includes a light-emitting device, the system comprising

a pixel circuit in each of said pixels, said circuit including said light-emitting device, which emits light when supplied with a voltage V_{OLED},

a drive transistor for driving current through the light-emitting device according to a driving voltage across the drive transistor during an emission cycle, said drive transistor having a gate, a source and a drain and characterized by a threshold voltage,

a storage capacitor coupled across the source and gate of said drive transistor for providing said driving voltage to said drive transistor,

a supply voltage source coupled to said drive transistor for supplying current to said light-emitting device via said drive transistor, said current being controlled by said driving voltage,

a monitor line coupled to a read transistor that controls the coupling of said monitor line to a first node that is common to the source side of said storage capacitor, the source of said drive transistor, and said light-emitting device,

a data line coupled to a switching transistor that controls the coupling of said data line to a second node that is common to the gate side of said storage capacitor and the gate of said drive transistor, and

a controller coupled to said data and monitor lines and to said switching and read transistors, and adapted to

during a first cycle, turn on said switching and read transistors while delivering a voltage Vb to said monitor line and a voltage Vd**1** to said data line, to supply said first node with a voltage that is independent of the voltage across said light-emitting device,

during a second cycle, turn on said read transistor and turn off said switching transistor while delivering a voltage Vref to said monitor line, and read the value of the drive current at said first node via said read transistor and said monitor line, and

compare said read value of said drive current with a reference value of said drive current and, if said read value and said reference value are different, repeating said first and second cycles using an adjusted value of said voltage Vd**1**, until said read value and said reference value are substantially the same.

22. A system for controlling an array of pixels in a display in which each pixel includes a light-emitting device, the system comprising

a pixel circuit in each of said pixels, said circuit including said light-emitting device, which emits light when supplied with a voltage V_{OLED},

a drive transistor for driving current through the light-emitting device according to a driving voltage across the drive transistor during an emission cycle, said drive transistor having a gate, a source and a drain and characterized by a threshold voltage,

a storage capacitor coupled across the source and gate of said drive transistor for providing said driving voltage to said drive transistor,

a supply voltage source coupled to said drive transistor for supplying current to said light-emitting device via said drive transistor, said current being controlled by said driving voltage,

a monitor line coupled to a read transistor that controls the coupling of said monitor line to a first node that is common to the source side of said storage capacitor, the source of said drive transistor, and said light-emitting device,

a data line coupled to a switching transistor that controls the coupling of said data line to a second node that is common to the gate side of said storage capacitor and the gate of said drive transistor, and

a controller coupled to said data and monitor lines and to said switching and read transistors, and adapted to

during a first cycle, turn on said switching and read transistors while delivering a voltage Vb to said monitor line and a voltage Vd**1** to said data line, to supply said first node with a voltage that is independent of the voltage across said light-emitting device,

during a second cycle, turn on said read transistor and turn off said switching transistor while delivering a voltage Vref to said monitor line, and read a first sample of the drive current at said first node via said read transistor and said monitor line,

during a third cycle, turn off said read transistor and turn on said switching transistor while delivering a voltage Vd**2** to said data line, so that the voltage at said second node is a function of V_{OLED},

during a fourth cycle, turn on said read transistor and turn off said switching transistor while delivering a voltage Vref to said monitor line, and read a second sample of the drive current at said first node via said read transistor and said monitor line, and

compare said first and second samples and, if said first and second samples are different, repeating said first through fourth cycles using an adjusted value of at least one of said voltages Vd**1** and Vd**2**, until said first and second samples are substantially the same.

* * * * *

专利名称(译)	用于amoled显示器的像素电路		
公开(公告)号	US20140252988A1	公开(公告)日	2014-09-11
申请号	US13/789978	申请日	2013-03-08
[标]申请(专利权)人(译)	伊格尼斯创新公司		
申请(专利权)人(译)	IGNIS创新INC.		
当前申请(专利权)人(译)	IGNIS创新INC.		
[标]发明人	AZIZI YASER CHAJI GHOLAMREZA		
发明人	AZIZI, YASER CHAJI, GHOLAMREZA		
IPC分类号	H05B33/08		
CPC分类号	H05B33/0848 G09G3/3233 G09G2300/0842 G09G2320/0295 G09G2320/045 G09G2320/0693 G09G3/3258 G09G2300/0819 G09G2320/048 G09G2320/10 H05B45/14		
其他公开文献	US9351368		
外部链接	Espacenet USPTO		

摘要(译)
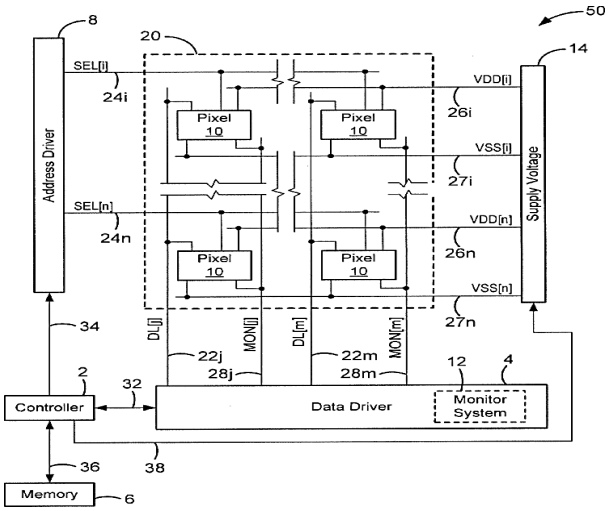
从像素被编程时产生的像素中提取所选像素的OLED电压，使得像素电流是OLED电压的函数。用于提取OLED电压的一种方法是首先以电流不是OLED电压的函数的方式对像素进行编程，然后以电流是OLED电压的函数的方式对像素进行编程。在后一阶段期间，改变编程电压，使得像素电流与像素被编程的像素电流相同，使得电流不是OLED电压的函数。然后使用两个编程电压的差异来提取OLED电压。